TRITON LED

TS

S-ROW Series

Efficiency and Sustainability

IP54

Fullfill your expectations of lighting with the S-row TS-series, where form meets function in the most eco-friendly manner.

For industrial and commercial lighting, the S-row fixture is designed for those who refuse to compromise on quality, efficiency, and environmental responsibility. With its sleek, narrow profile, the S-row enhances the aesthetic of any space and brings unparalleled functionality to the forefront. Crafted to meet IP54 standards, this fixture excels in moist environments, ensuring long-term reliability and functionality.

High Lumen Output: Illuminate spaces brighter and more uniformly, reducing the need for multiple fixtures.

Easy Installation: Quick setup means less downtime and more efficiency right from the start.

Superior Durability: Engineered to withstand harsh conditions without faltering.

Sustainable Design: Every component of the S-ROW is designed with the end in mind, facilitating reuse or recycling, thus championing the circular ecnonomy

Technical Data

Colors	3000K-4000K-5000K-6500K
Lumen: Min – Max:	80Ra: 194–211 (Energy label A or B) 3130 – 18180Lm (Ra80) 90Ra: 151–164 (Energy label B or C)
CRI:	Ra80 / Option: Ra90
Optics Angle:	60°, 90°, 145° (PMMA)
Driver:	Dali2 (B2L), OnOff
Power Consuption:	16W-99W
Current Variations:	150mA-500mA
Average Lifetime:	100.000h/@25°C - L90/B10 72.000h/@40°C - L80/B10 56.000h/@75°C - L80/B20
Temperature:	-15°C to 50°C
Size Increments:	600mm / 1260mm / 1760mm
Dimensions:	H: 48mm W:71mm
IP Grade:	Cable gland: IP54
Material:	6061 Anodized Aluminium
Color Options:	Silver. (E0)
Accessories	Bracket: Standard 15mm Option: 30mm, 150mm, 240mm
Certifications:	CE (EMC, LVD, RoHS), EUR1.

Features:

- Robust, compact architectural design.
- Controllable and programmable Driver.
- Easy installation and maintenance.
- Precise and high quality output.
- Flicker Free Light Distribution.
- Extensive functionality.

Wireless protocols: MultiSensors:

B2L ready

DIMMABLE

FLICKER FREE

Applications:

- Storage Lighting
- Sports Hall Lighting
- Industrial Lighting
- Commercial Lighting

DRIVER protocols:

DALI 2

AP (on/off)

WARRANTY 5 YEAR WARRANTY

TRITONLED

www.tritonled.rs

TS-Series Technical Drawing:

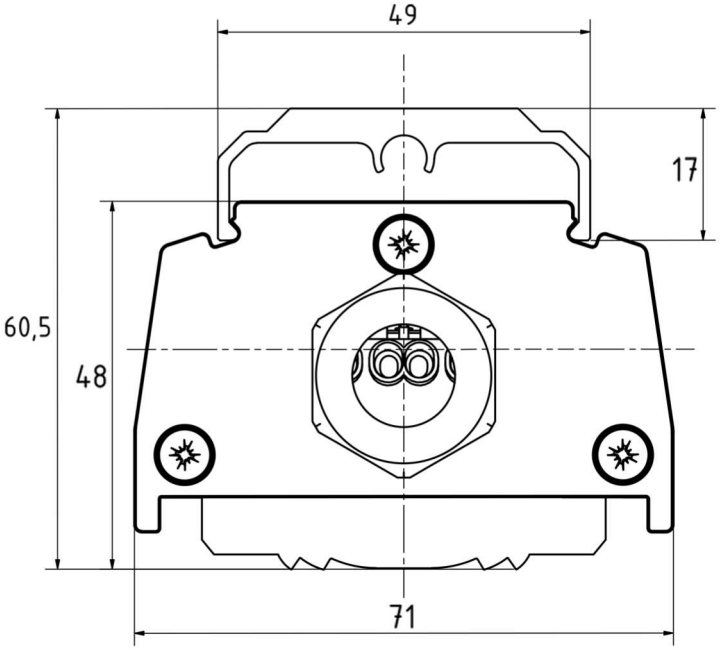

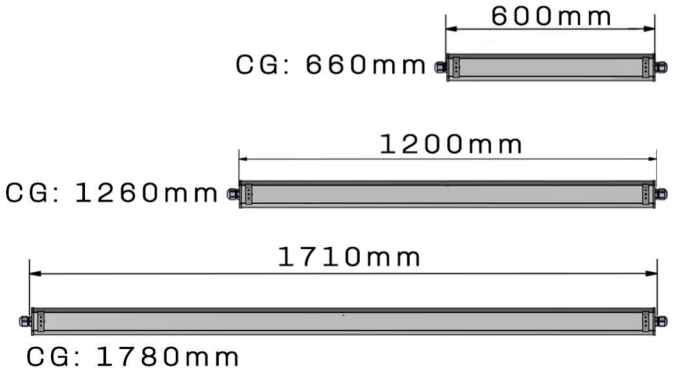

Power Consumption:

680 - 1740 mm

Power usage, Lm/W

Triton **S-ROW** - 211Lm ledmodules									
Art.nr Lenght	**LENGHT (mm)**	**Effect** wattage	Amp (mA)	**Lm/W Ra80**	Led module Lumen	Fixture LUMEN (230V)	**Lm/W Ra90**	Led module	Fixture Efficiency (Lm)(230V)
A	**600**	**16.10**	250	205	3300	3130Lm	**158**	2544	**2410**
A	**600**	**22.80**	350	200	4560	4330Lm	**154**	3511	**3330**
A	**600**	**33.00**	**500**	**193**	6380	6060Lm	**149**	4917	**4670**
B	**1200**	**32.20**	250	205	6600	6270Lm	**158**	5088	**4830**
B	**1200**	**45.60**	350	200	9120	8660Lm	**154**	7022	**6670**
B	**1200**	**66.00**	**500**	**193**	12760	12120Lm	**149**	9834	**9340**
C	**1710**	**28.50**	150	210	6000	5700Lm	**162**	4617	**4380**
C	**1710**	**38.40**	200	207	7935	7530Lm	**160**	6144	**5830**
C	**1710**	**48.30**	250	205	9900	9400Lm	**158**	7631	**7240**
C	**1710**	**68.40**	350	200	13680	12990Lm	**154**	10534	**10000**
C	**1710**	**99.00**	**500**	**193**	19140	18180Lm	**149**	14751	**14010**

TS series specifications

TSA16K0(x)8C4A	Triton S-Row 60cm 33W 6060Lm 4K OnOff Ra80 CG IP54 IK(
TSB66K0(x)8C4A	Triton S-Row 1,2M 66W 12120Lm 4K OnOff Ra80 CG IP54 IK
TSC99K0(x)8C4A	Triton S-Row 1,7M 99W 18180Lm 4K OnOff Ra80 CG IP54 IK

Medium 60°

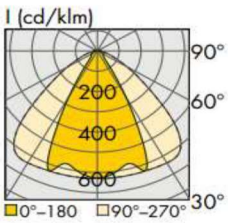

Wide 90°

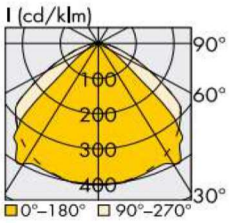

Batwing 145°

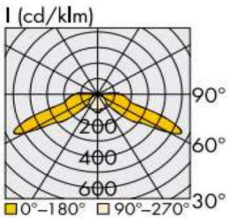

Serbia/Sweden
Novi Sad/Karlstad
office@triton.rs
info@tritonled.se

Disclaimer:
Triton reserves the right to make changes to this product at any time without prior notice and such modifications shall be effective immediately. For more information and detail, visit www.triton.rs or contact office@triton.rs
© Triton Engineering

TRITONLED